TIRE SERVICE INTERNATIONAL

Tire Siper
Models STE-M, ST, and SP

buyTSI.com - 800.223.4540





ST shown with optional 6030 quick mount wheel lock





READ INSTRUCTIONS THOROUGHLY BEFORE OPERATING

Tire Service International, LLC
201 Chelsea Road
Monticello, MN 55362

Office: 602.437.5020
Email: sales@buytsi.com
Fax: 602.437.5025

Contact us for any assistance

800.223.4540

Revised: June 2025

Section 1 - General Description

MODEL STE-M SIPER

- Allows the operator to sipe both non-mounted and mounted tires with the same machine.
- For non-mounted tires, expandable rims are available 13" to 24.5" to fit over standard expanding hub of the STE-M Tire Siping Machine.
- For mounted tires, the expandable hub is swung out of the way; the wheel is fitted with the necessary adapter and rolled into the machine and siped.

ST SIPER

- Will sipe most tires from 12" to 24.5" with the adapters available.
- Included are 12 blades, 5-7-9-11-13 lead screws, and silicone emulsion.

SP SIPER

- Designed exclusively for passenger car and light truck tires.
- No accessories are required making this unit perfect for many applications.
- Designed to accommodate mounted tires, the SP Siper is built to last, giving many years of dependable service.

Safety Requirements

1. READ THIS MANUAL BEFORE OPERATING

2. SAFETY GLASSES ARE REQUIRED

3. Do not wear loose clothing.

4. Before each use, visually inspect for loose bolts, fittings, and damaged or improperly assembled accessory equipment.

Installation Requirements

ELECTRICAL SUPPLY

- 120 Volts, 1 Phase, 60 Hertz
- 20 Amp Circuit

AIR SUPPLY

- 6 CFM should be available
- Minimum of ¼" ID air hose
- Minimum of 130 PSI at the machine
- Air supply should be filtered, lubricated air

NOTE: The STE-M electrical system is capable of operation correctly within a humidity range of 20 to 95 percent. The STE-M will withstand storage and transportation temperatures within the range of -25C to 55C (-13F to + 131 F) and up to 70C (158F), for short period not exceeding 24 hours.

NOTE: If STE-M is operated below 32°F (0°C); The coolant media must either be a mixture containing anti-freeze or a windshield washer fluid.

Section 1 - Unpacking

From all of us at TSI, thank you for purchasing the Tire Siping Machine. The important operating and maintenance instructions contained here will ensure the Siper operates dependably for many years to come. This manual will provide the proper instructions for setting up, using and maintaining the Siper.

WARNING: THE BLADE ON THE SIPER IS VERY SHARP

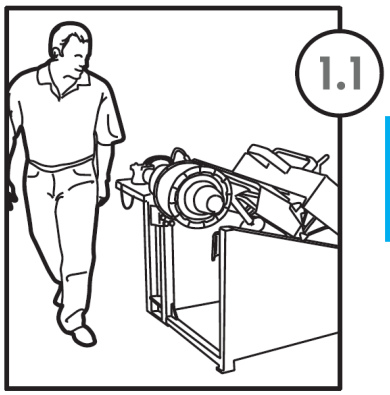

Before removing all packaging, look over the Siper for any shipping damage. Although damage is unlikely, it is important to notify the shipping carrier immediately.

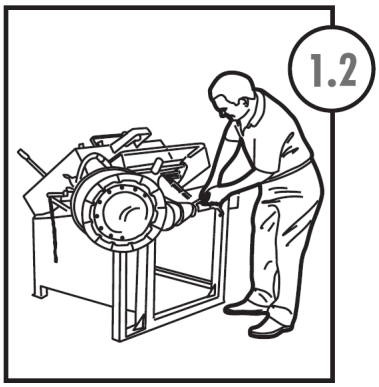

For overseas units, the Siper will be crated. Cut the bands. Remove the sidewalls and top of the crate.

Unbolt the unit from the pallet and remove. The accessories and rims will be banded to the unit. Cut the bands and remove. Cut and remove the straps holding the hood down. Lift the hood.

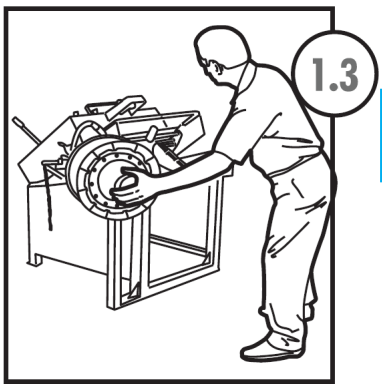

Pull the pin and swing the expandable hub assembly out of the way (STE-M-only).

Section 2 - Set-Up

To transport the machine ensure the hood is down, the hub is in its stored position, and the lock pin on the hub is in place.

Operate the unit on a clean, level, non-slip surface. The minimum work area should be at least 3 feet from around the machine. This distance is also the minimum recommended for non-operators to be in proximity to the machine.

***WARNING**: Remember to wear recommend PPE (Personal Protective Equipment) when working with the Siper. This includes gloves, eye, ear, inhalation, and foot protection. The A-Weighted Sound Pressure Level at the work station was measured at 79.8 dB(A).*

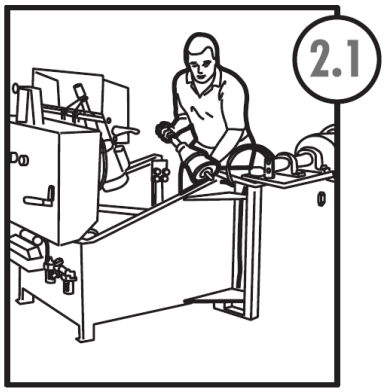

LUBRICATION

To gain access to the inside of the Siper, move the wheel mount assembly from its operational position on the side of the Siper (Fig. 2.1). To cool the cutting blade and lubricate the tire, mix 1 part silicone lubricant (part #2.029) to 16 parts water and fill the mist unit supply container (Fig 2.2). Insert hose and secure. Engage the mister at the time of engaging the blade on the tire. Install the drip pan to collect any run-off lubricant. All lubricant run off, rags and materials should be disposed of according to local environmental regulations.

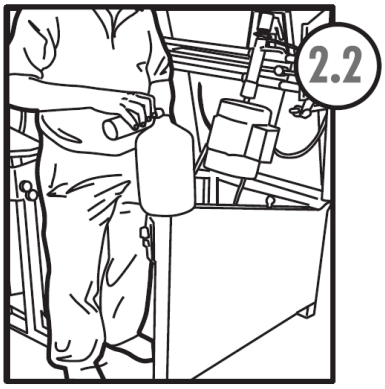

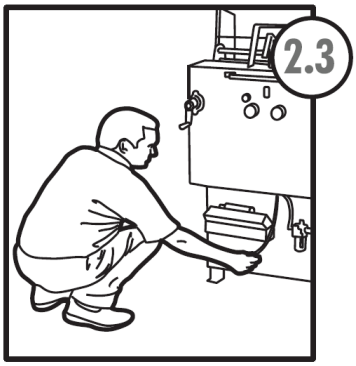

POWER CORD

Extend the power cord from the back of the cabinet to prevent it from being damaged by the stops on the hood. Position cord away from walkways. A tie-down will help keep the excess cord safe and prevent trip hazards.



AIR CONNECTION

Install the correct air hose fitting. (See arrow.) Use Teflon tape to prevent air leakage. The moisture trap has a view glass. Set the air regulator to 90 PSI.

Section 3 - Components

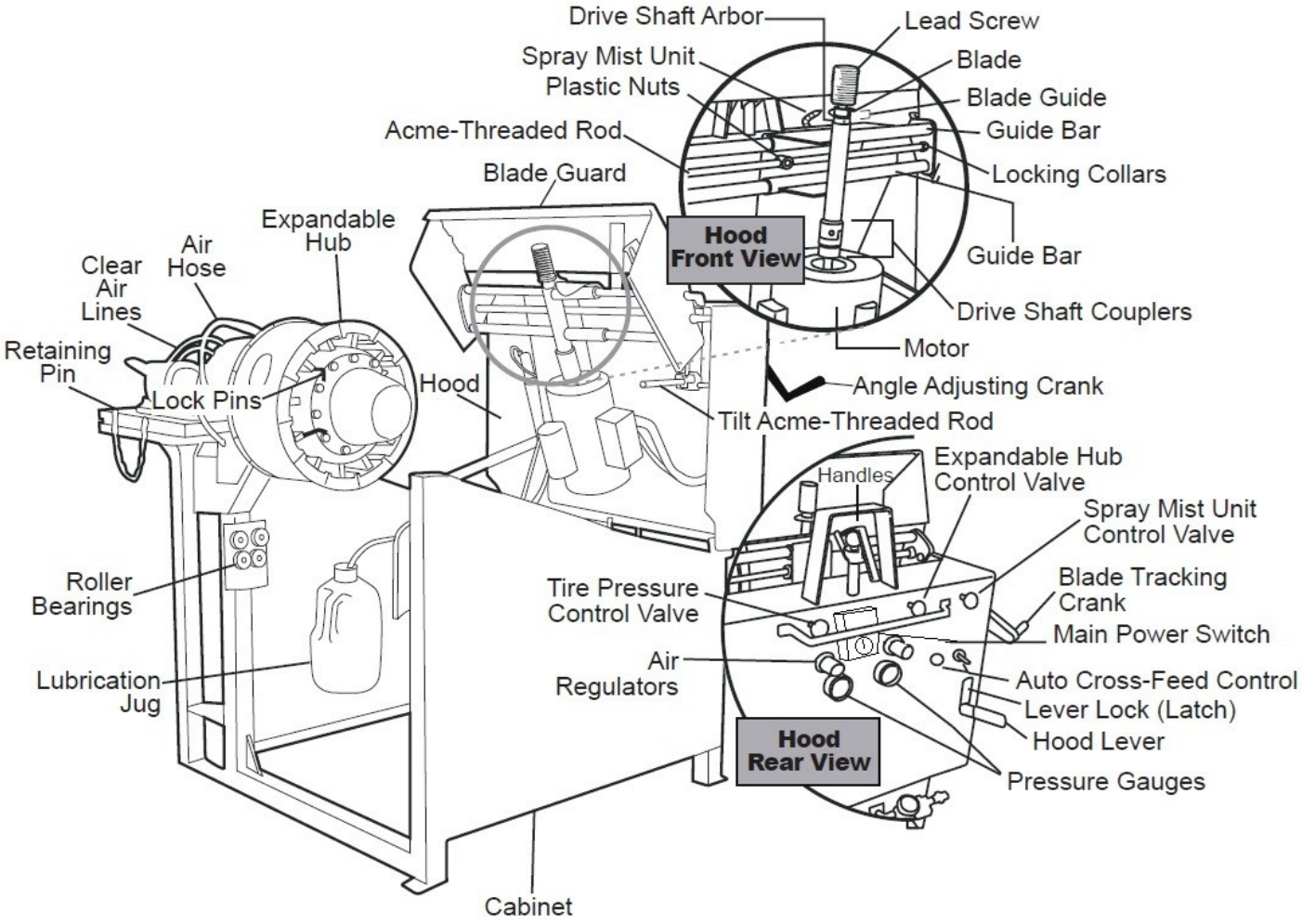

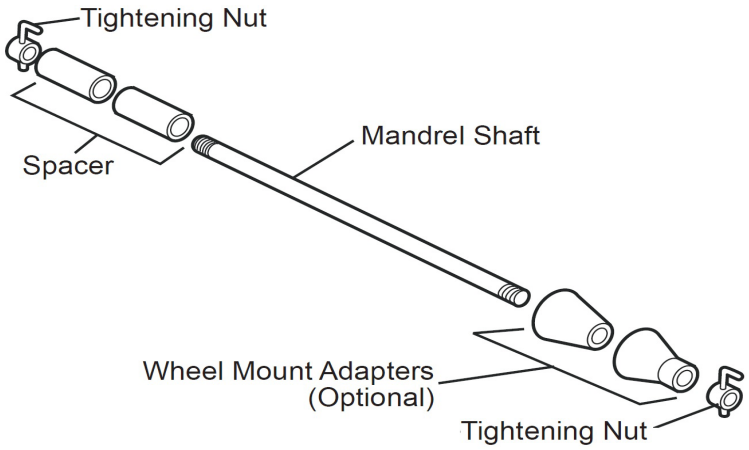

Section 3 - Components

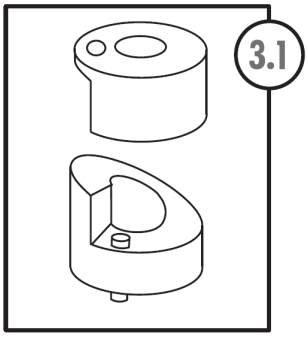

BLADE GUIDES

Four blade guides are supplied:

Part #	Size	Distance between cuts	Tire Type
24.929	250/1000	6.4 mm (.25 inch)	Passenger car
25.929	300/1000	7.6 mm (.30 inch)	Snow and light truck
26.929	350/1000	8.9 mm (.35 inch)	Over the road truck
27.929	400/1000	10.2 mm (.40 inch)	Off-road truck

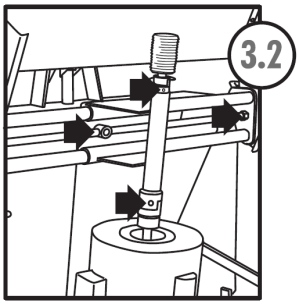

Set screws are on the motor and drive shaft couplers, the nut on the ACME threaded rod, and the plastic nuts on the ACME threaded rods.

The machine will vibrate during operation, so it is important to tighten the set screws as needed. (See section 6 for vibration maintenance procedures).

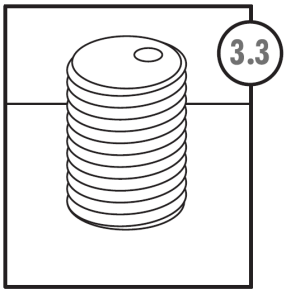

LEAD SCREWS SELECTION

The lead screws are changed to set the depth for siping into the tire. Measure the tire tread and use a lead screw with a minimum of 1 or 2/32 less than the low spot on the tire, 5/32 and 7/32 for used tires, 9/32 for most new passenger tires, 11/32 for most new light truck tires, and 13/32 for big truck tires (20" to 24.5").

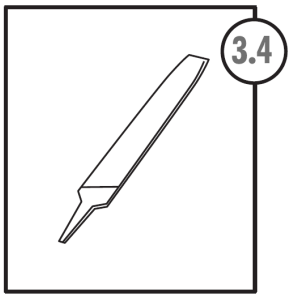

TOOL BOX

The tool box contains a variety of tools used through out the daily operation and maintenance including a file to keep the blade sharp, Allen wrenches, and extra blades.

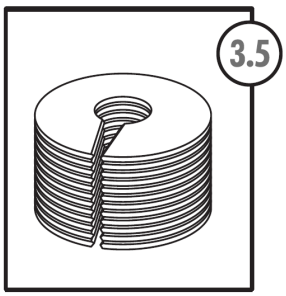

SIPING BLADES

*O*ne dozen blades (#15005)

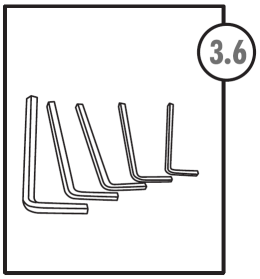

ALLEN WRENCHES

There is an Allen wrench to fit every set screw on the machine. The sizes provided are: 3/16,1/4, 5/32, 1/8, 3/32 and 2mm.

Section 3 - Components

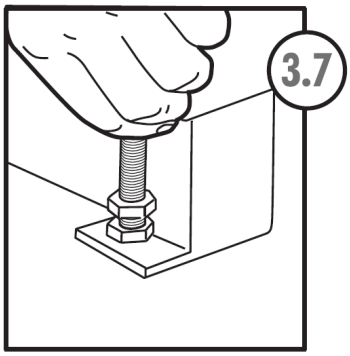

LEVELING SCREWS

Adjust the feet to stabalize the unit on the floor. These may need to be adjusted over time.

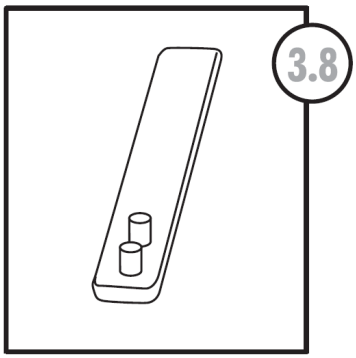

SPANNER WRENCH

The spanner wrench is used to loosen the lead screws for changing the blade guide and blade or the lead screws themselves.

NOTE: Only hand tighten the lead screw. Never use the spanner wrench to tighten the lead screw.

Section 4 - Mounting

The type of tires that can be siped depends on the model.

MODEL SP - The SP Siper is designed for mounted tires only and the sizes are limited to passenger car/light truck.

MODEL ST - The ST is also designed for mounted tires only, but has a wider arrange of tire sizes from 12″ to 24.5″.

MODEL STE-M - The STE-M is designed to sipe both non-mounted and wheel-mounted tires with sizes ranging from passenger car/light truck to heavy truck tires. Typically brand new tires are unmounted and will find that this to be the predominant way to sipe tires. This mounting process will be tailored for the expandable hub.

The second method is reserved for wheel-mounted tires and for this situation the expandable hub will be moved to the side (STE-M only) and using the wheel-mount adapters that come with the Siper (STE-M, ST and SP).

NOTE: Sipe down to the tread depth, but never deeper. If chunking is a concern, go shallower and wider. Remember the maximum benefits are Traction - Wear - Comfort. This is achieved with the deepest sipes feasible and as many as possible.

Section 4 - Mounting & Dismounting

EXPANDABLE HUB (STE-M ONLY) - MOUNTING

To reduce the risk of injury, seek lifting assistance when lifting larger tires on to the expanding rim.

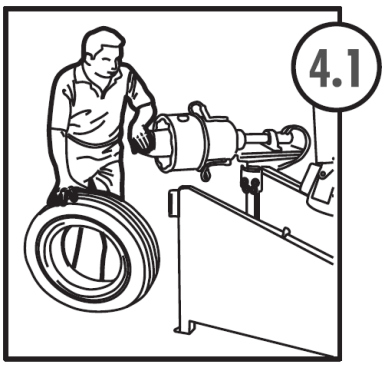

Pull the retaining pin to swing the expandable hub and rim assembly out.

USE PROPER LIFTING TECHNIQUES

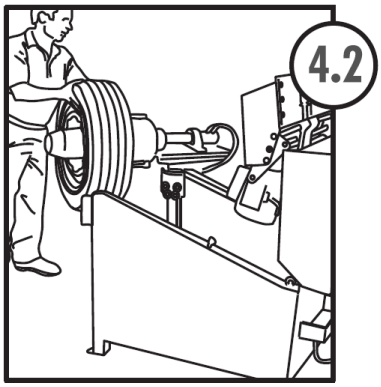

Set the tire on the expandable rim. Swing it back in and insert pin.

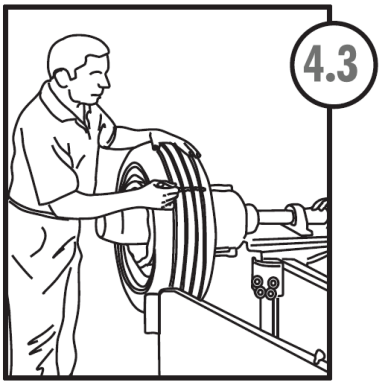

Make a small mark on the tire to use as a reference point. Ensure that a tire is properly mounted on the hub before expanding the rim.

PRESSURE SETTINGS

To Inflate:

1. Pull the Inflate Hub valve.
2. Pull the Inflate Tire valve.
3. ***For passenger and light truck tires:*** Set the expandable hub pressure around 75-80 PSI and the tire inflation pressure at 30 PSI.
4. ***For big truck tires:*** Set the expandable hub pressure around 75-80 PSI and the tire inflation pressure at 30 PSI.
5. ***Note:*** **If the expandable rim does not seal or contact tire properly, it is permissible to increase hub pressure by 10 lb increments up to max of 120 PSI. Normal operation is 75-80 PSI.**

Section 4 - Mounting & Dismounting

EXPANDABLE HUB (STE-M ONLY) - DISMOUNTING

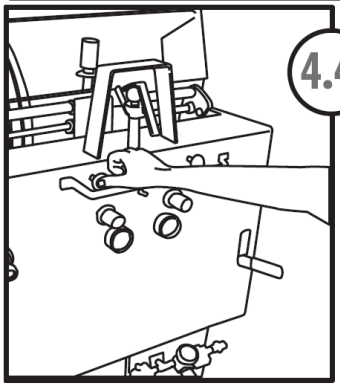

Pay close attention to the order in which this procedure is preformed. Release the TIRE pressure FIRST by pushing the valve in.

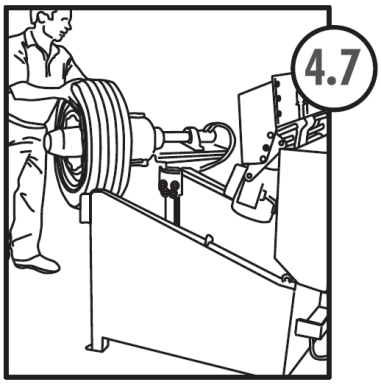

Slowly swing out the expandable hub assembly.

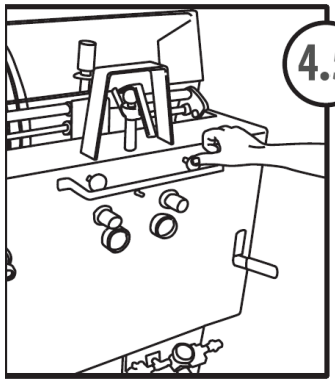

Push in the expandable hub pressure release valve.

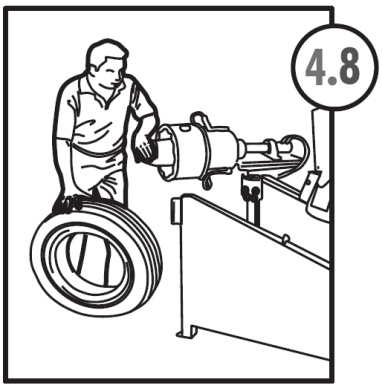

Using two hands and proper lifting techniques, remove the tire.

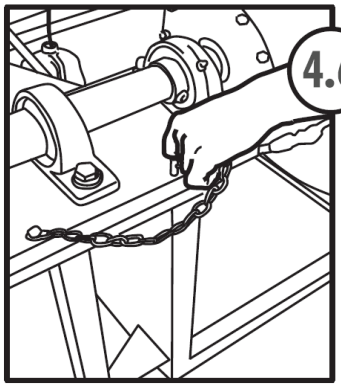

Pull the retainer pin holding the expandable hub assembly in place.

Please refer to the troubleshooting guide if the hub does not contract.

MOUNTED TIRES (ST, STE-M) – MOUNTING

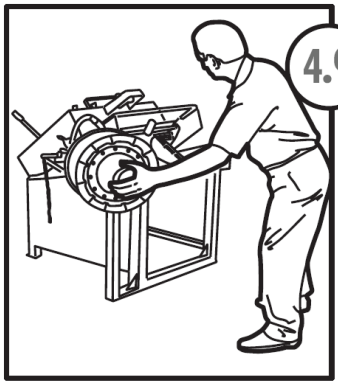

To sipe mounted tires, swing the expandable hub and rim assembly out of the way.
(STE-M only)

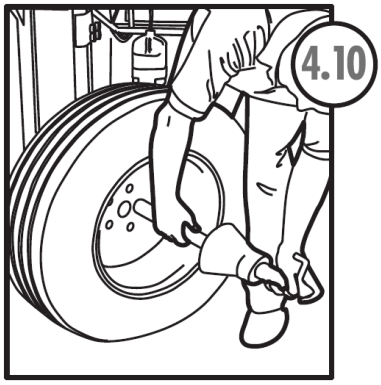

Insert the mandrel shaft and large cone on the back of the wheel.

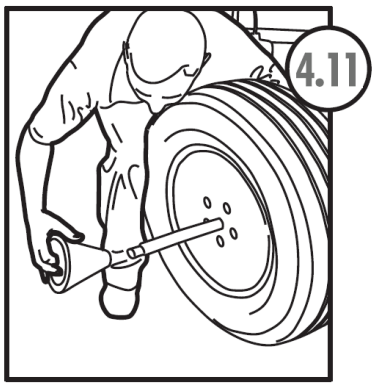

Install small tapered cone on the front of the wheel.

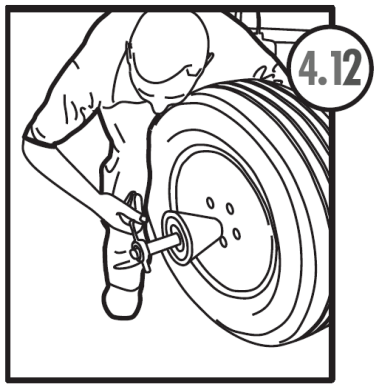

Install spacer and mandrel shaft. Handle on the nut must face inward.

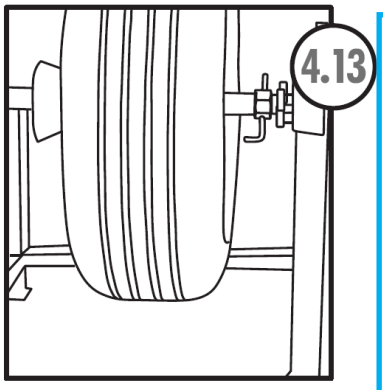

WHEEL PLACEMENT

Lifting assistance is important when lifting the mounted assembly. Set mandrel shaft into the roller bearings in the cabinet. Rotate tire to be sure nothing catches or is loose.

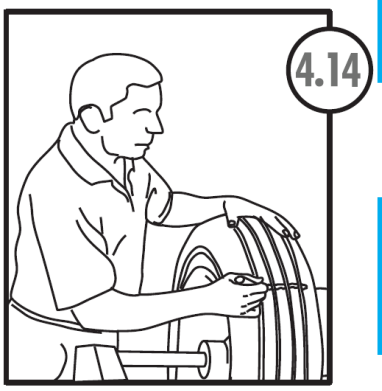

Mark the tire for a reference point and sipe the tire.

MOUNTED TIRE (SP)-MOUNTING

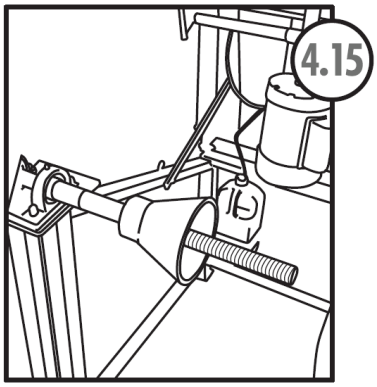

Insert the mid-sized spacer on the mandrel shaft, followed by the longest spacer.

Next insert the larger cone with the tapered end facing the mandrel shaft bearings.

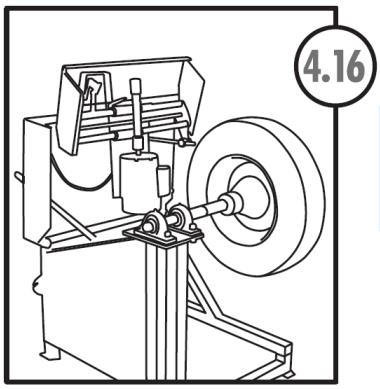

Mount the tire with the inside of the tire facing the cone.

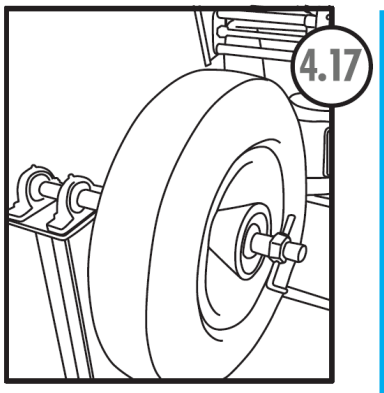

Once the tire is in place, insert the second cone with the tapered end pointing toward the wheel. Next insert the smallest spacer followed by the mandrel shaft. Tighten the mandrel shaft by hand.

Be sure to check the assembly for wobble by spinning the tire. The tire should spin with NO wobble or side movement.

Section 5 - Mounting & Dismounting

ENSURE HOOD IS LOCKED BEFORE SHARPENING BLADE.

DISCONNECT POWER WHEN SHARPENING THE BLADE.

BLADE SHARPENING (ALL MODELS)

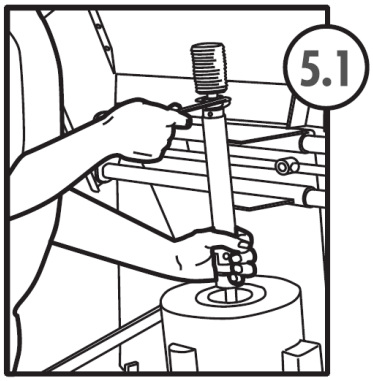

With the file in one hand hold the coupler of the drive shaft with the other hand.

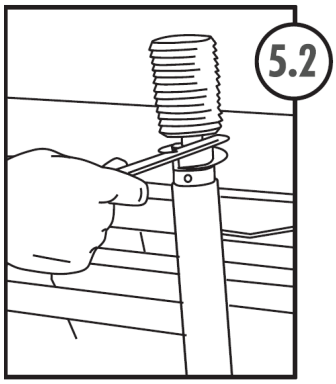

File the leading edge of the blade from the bottom. Remove the burr from the top. Round off the tip of the blade so it will follow the existing sipe on each revolution. Sharpen blade on light tires every 8 tires. Big truck tires every 4 tires.

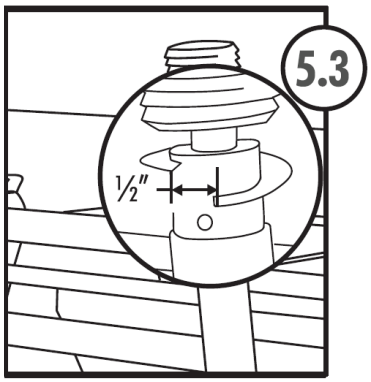

The blade can be sharpened until there is 1/2" space between the leading and trailing edge of the blade.

BLADE GUIDE & LEADS CREW CHANGING (ALL MODELS)

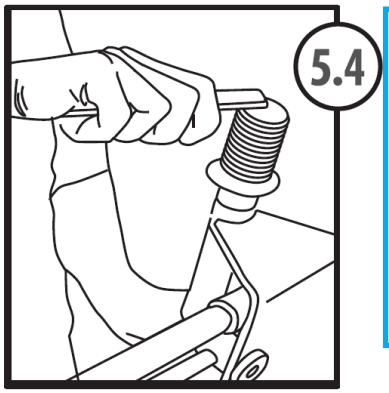

Insert the forward peg of the spanner wrench into the hole at the top of the lead screw.

NOTE: On a weekly basis check the blade for cracks and defects.

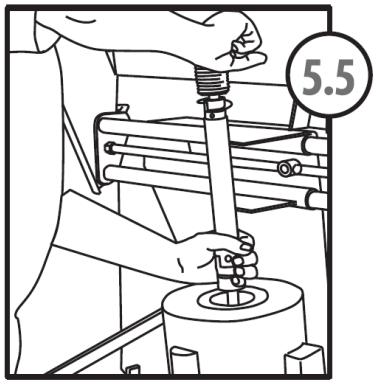

Hold the coupler on the drive shaft. Turn the spanner wrench.

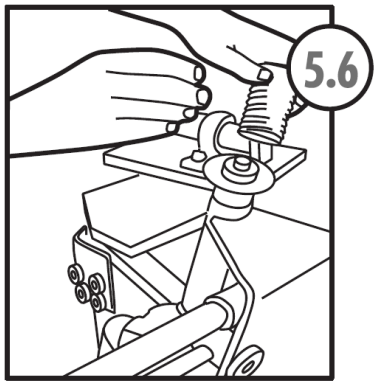

Remove the lead screw and washer.

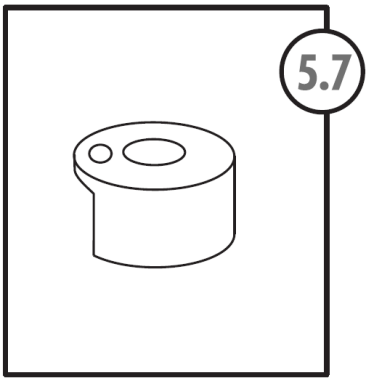

Remove the top half of the blade guide.

Section 5 - Operation

BLADE GUIDE & LEADS CREW CHANGING (ALL MODELS)

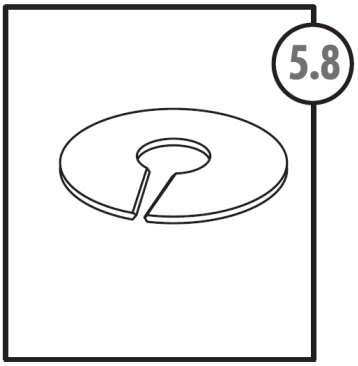

Remove the blade.

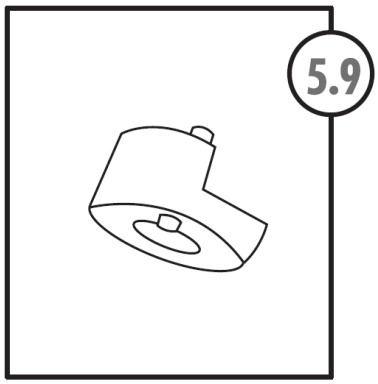

Remove the bottom of half of the blade guide.

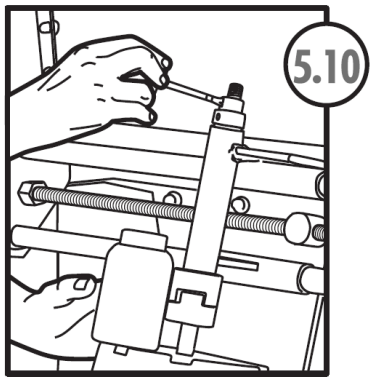

Clean parts and reverse procedure to install. Use anti-seize on the drive shaft and parts when installing.

ONLY TIGHTEN THE LEAD SCREW BY HAND WHEN ASSEMBLING.

OPERATION AND SETTINGS SPRAY MIST COOLING UNIT

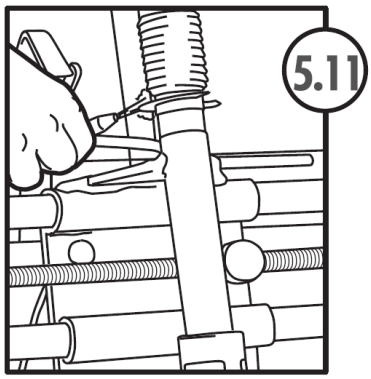

The Spray Mist Cooling Unit is designed to cool the blade during siping and provide needed lubrication for the tire.

DAMAGE TO BLADE AND TIRE CAN OCCUR IF NOT PROPERLY LUBRICATED

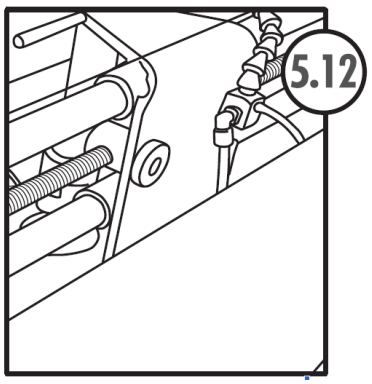

Use the adjustable nozzle of the spray mist unit to create a light mist on the blade. During operation of the Siper, the blade should be continually damp. If there is a significant amount of run off from the overspray on the tire, adjust the nozzle's spray to a lighter mist.

Engage the spray mist unit control valve button at the back of the unit at the same time the siping blade is engaged. The blade should be kept damp during the siping process.

Periodically check the drip pan and empty as necessary according to local environment procedures. The drip pan should be installed directly under the Siper to collect any run-off lubricant.

Section 5 - Operation

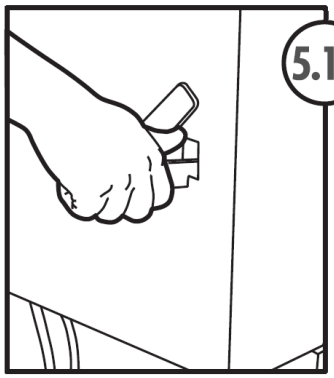

Use your right hand to unlatch the hood and carefully lower the hood down to the tire without starting the Siper. (Use caution to prevent dropping the hood).

Please inspect these parts for normal wear. The safety knob/grip, handle or shield should be replaced at the first signs of wear or malfunction.

Knob/Grip	#15.550
Handle	#90.070
Lock Bar Shield	#54.298

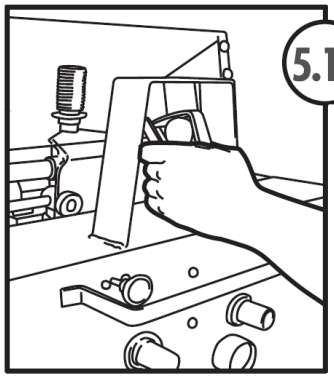

Use your left hand for the handle on switch.

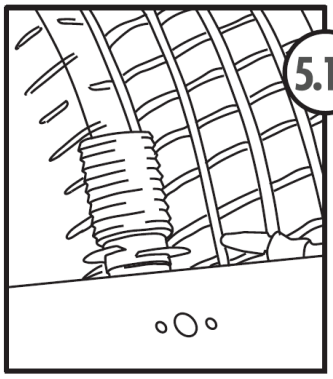

Have at least 3/4 the diameter of the lead screw on the surface of the tire.

Turn the main power switch on.

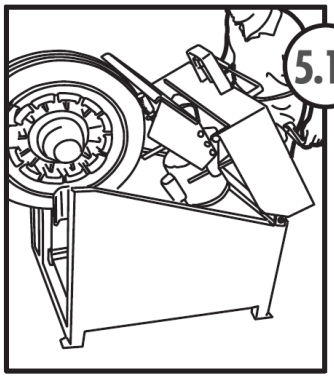

Adjust the Siper blade so the lead screw is parallel with the tread of the tire.

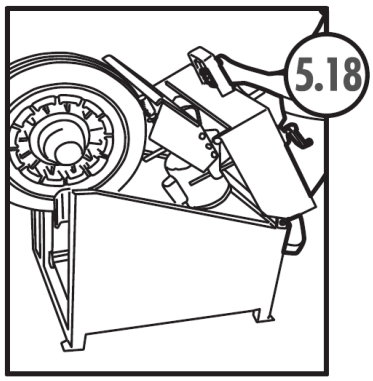

Pull the hood back and release lock on lever.

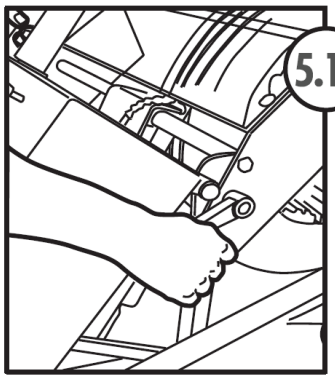

Set the Siper to the left edge of the tire.

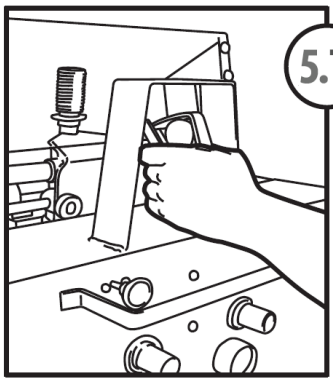

Squeeze the handle and lower into the tire at the reference point (chalk line).

At this time engage the spray mist unit. Start the spray mist unit at the same time you engage the blade.

Section 5 - Operation

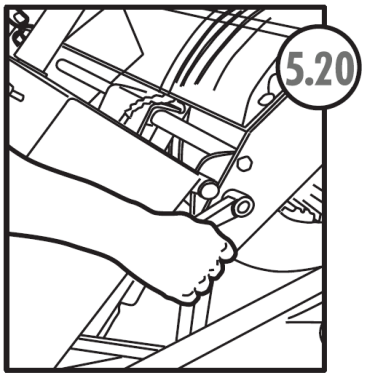

After each revolution of the tire turn crank 5 turns clockwise to move Siper to next section of the tire.

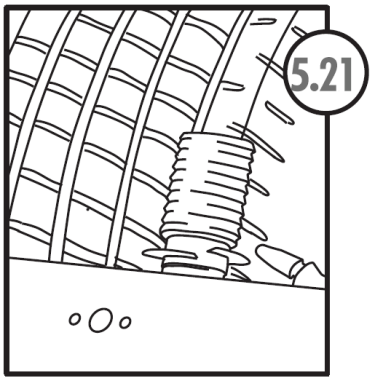

Continue siping across the tire to the right edge of the tread.

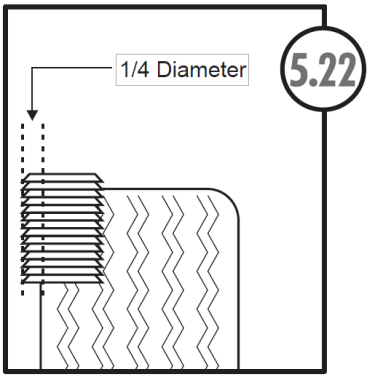

Do not let more than 1/4 the diameter of the lead screw off the edge of the tread surface. It's acceptable, on the last pass, if you do not get five full turns.

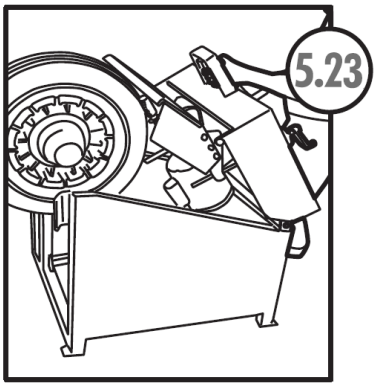

INTERRUPTIONS

If siping is interrupted, lift the hood from the tire with it running. Then turn the power off.

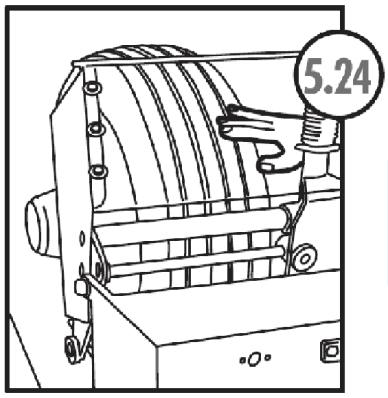

To continue, rotate the tire back 1/4 turn.

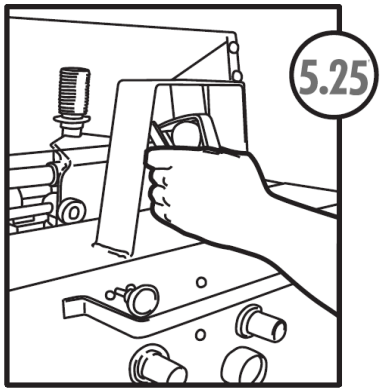

Start the Siper with the hood in the upright position and slowly lower into the tire. It will fall into the existing sipe.

Section 6 - Maintenance

UNPLUG UNIT BEFORE PERFORMING MAINTENANCE

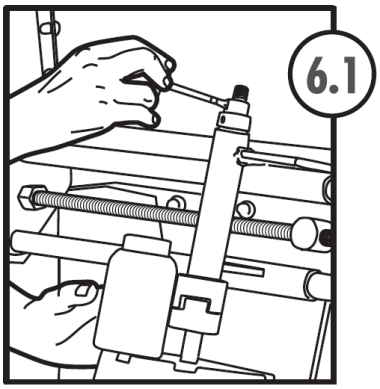

LUBRICATION

After you have removed the lead screw with the spanner wrench, apply a visible amount of anti-seize on these parts.

Refer to the Blade Guide and lead Screw Changing in section 5.

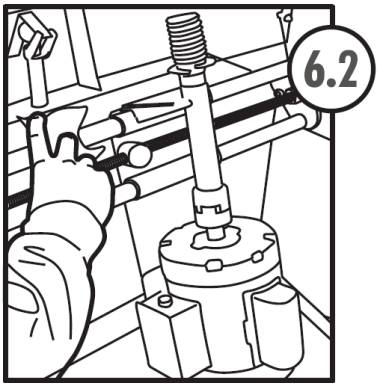

Keep the threads and guide bars clean by gently wiping down the surfaces with a clean rag as needed. Make sure to lube these items with a silicone spray lube.

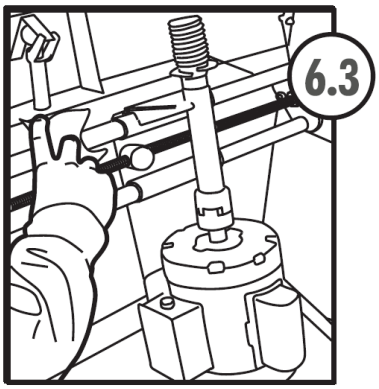

Raise the hood and clean the 2 guide bars using a 3M Scotch guard pad or emery paper.

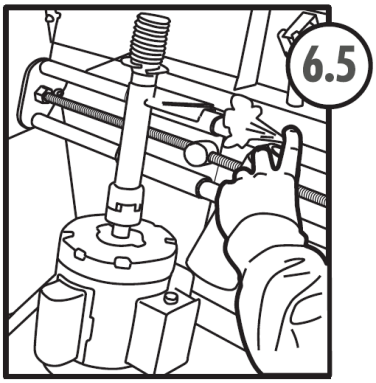

Spray the cross-feed ACME threaded rod.

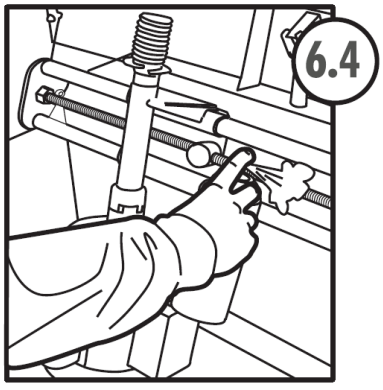

Spray the guide bars with a silicon lubricant.

NOTE: DO NOT use an oil which attracts dust and dirt

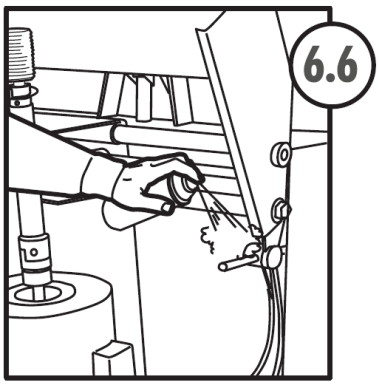

Spray the tilt ACME threaded rod.

Section 6 - Maintenance

DAILY PREVENTATIVE MAINTENANCE

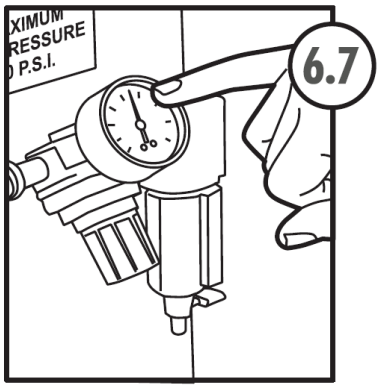

Check the regulator. Make sure your not exceeding the maximum pressure of 90 PSI.

VIBRATION

Vibration is expected during the normal operation of your Siper. It's important to ensure that the following areas are checked and properly re-tightened accordingly.

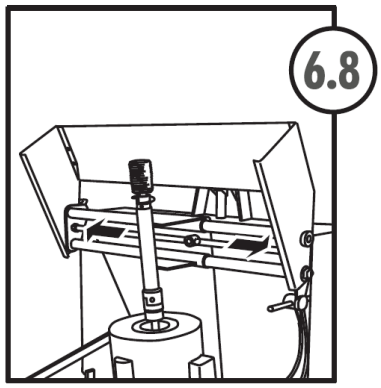

Loosen set screws on ACME adjusting nut using proper wrench. Adjust nut out to side frame on both sides. Do not over tighten.

Tighten set screw, test hand crank. It should turn freely. If not re-adjust.

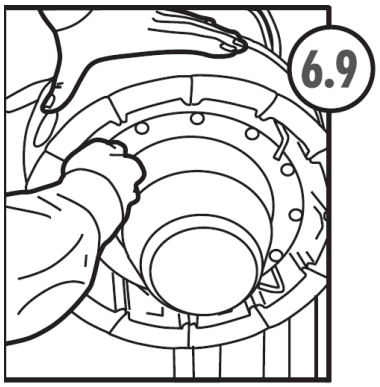

Check the lock pins on the expandable hub once a day to ensure they remain locked. (STE-M Only)

MONTHLY PREVENTATIVE MAINTENANCE

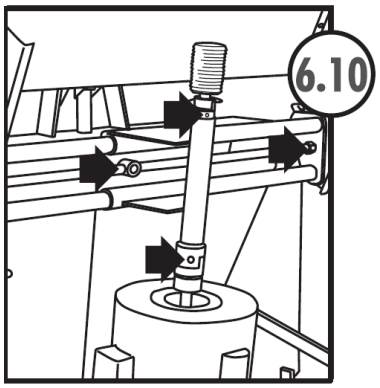

Use the supplied allen wrench to physically check the tightness of the set screws on the blade guides, coupler and and the cross feed nuts both on the cross feed rod and the tilt rod.

Section 6 - Troubleshooting

The Siper drive shaft bearings, hood latch, and other moving parts will require replacement if showing signs of malfunction or wear. These should be inspected when performing monthly safety inspections.

SIPER MOTOR WILL NOT RUN

Possible causes:

- Fuse blown
- Drive shaft seized
- Power Switch malfunction
- Handle Control switch malfunction

Solutions

- Unplug the Siper
- Turn the drive shaft by hand to verify bearings are spinning freely
- Test power switch for continuity
- Test handle control for continuity

BLADES BREAKING

Possible Causes/Solutions:

- Washer missing from lead screw and top blade guide.
- Blade guides worn out or improperly installed.
- Leading edge of blade too sharp (round off with file)
- Angle of lead screw set improperly
- Rocks and or debris not removed from tire
- Lead screw worn out
- Drive shaft bearing is worn out

Section 7 - Expandable Hub

The frequency for these procedures depend on humidity and or moisture levels in compressed air

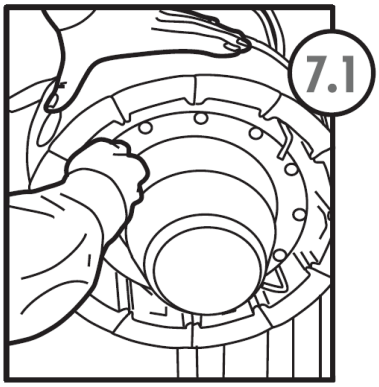

Check the four expandable rim locks to make sure they are locked into position. This involves physically feeling the locks to make sure they are turned counter clockwise.

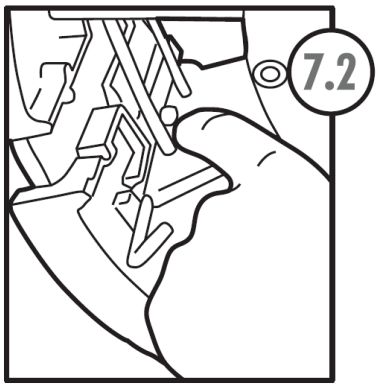

Look in the hub to see the tab locking into the rim. Make sure that all four are locked into position.

WEEKLY PREVENTATIVE MAINTENANCE

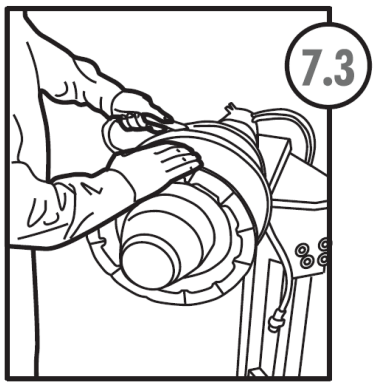

REMOVE THE EXPANDABLE RIM [1 of 2]

Remove the expandable rim by by first detaching the 2 air supply hoses.

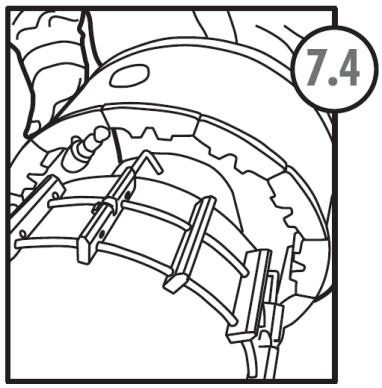

Step [2 of 2]

Continue by unlocking the tabs and pulling gently on the rim to remove.

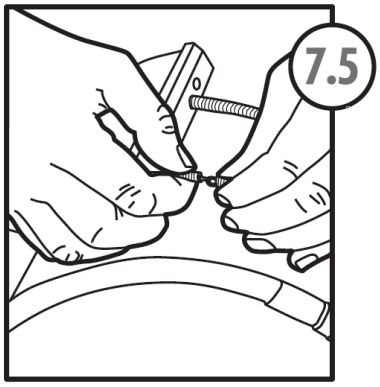

REMOVE THE PADDLES

Step [1 of 4]

Disconnect one of the two springs (rear spring recommended) and gently remove the spring by pulling it out of the paddles. Set the spring aside.

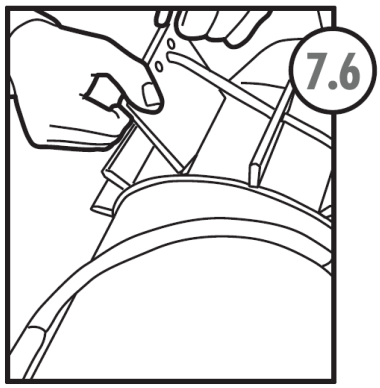

Step [2 of 4]

Remove the paddles one at time by pulling staight up until they are free of the paddle slot.

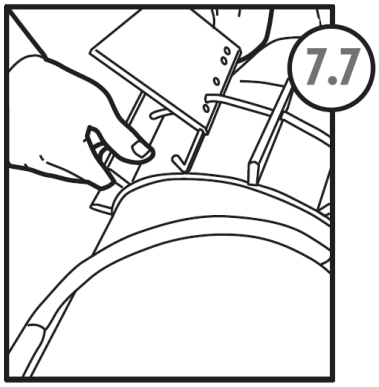

Set [3 of 4]

Then turning the paddle 180° and allowing the spring side to rest on the hub before continuing on to remove the next paddle. This will make removing the ring of paddles from the hub easier.

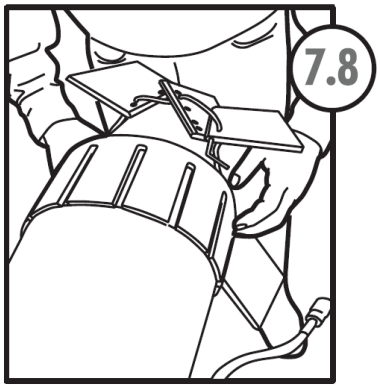

Step [4 of 4]
Once all the paddles are removed pull the collection gently away from the hub making sure to free any of the paddles that may get bound up by the locking pins.

Section 7 - Expandable Hub

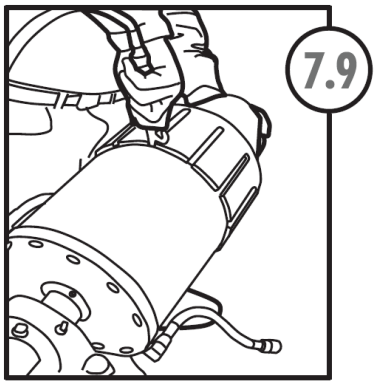

Using an air hose blow compressed air directly into the open paddle slots giving an approximate 2-3 second blast deep inside the slot working the hose side to side. This will help dislodge and expel any dirt or debris that may have collected in the hub. Insert the air hose into every other slot for sufficient air distribution.

ONLY USE A MARINE GRADE GREASE SUCH AS TSI #10787

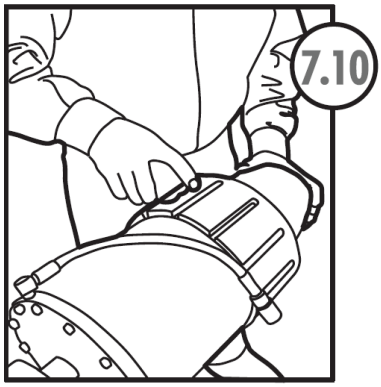

Using a marine grade grease apply a film of grease to each slot of the hub.

Turn the hub to advance to the next open slot and repeat until all slots have been lubricated.

PROTECTIVE GLOVES ARE RECOMMENDED INSTALLING PADDLES

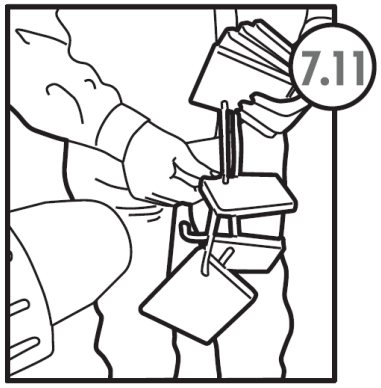

Carefully clean each paddle and the two springs before installing them. The paddles must be free of dirt and debris. If rough areas are present, remove them using a 3M Scotch Guard pad or emery paper.

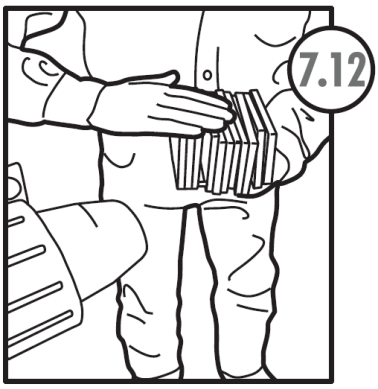

The slanted surface on each paddle inserts into the slots and ride against the cone within the hub. Apply an even film of marine grade grease on the slanted surface of each paddle.

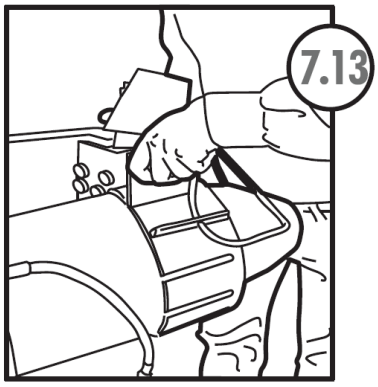

Begin inserting the paddles into the hub. Align the paddles so that the slanted (greased) side rest inside the hub. The narrower portion of the paddle slides in nearest the rear of the hub. The longer portion - nearer to you.

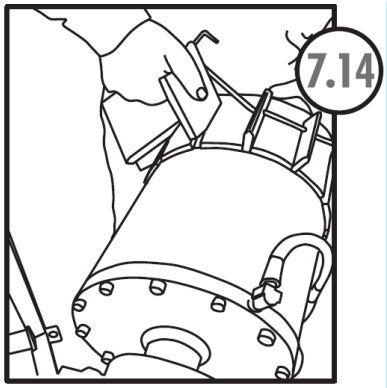

When installing the 12 paddles in in the slots on the hub make sure the four paddles with locking tabs have two plain paddles in between them. Install about six of the paddles and temporairy connect the spring through them. Rotate the hub and continued installing the paddles.

Section 7 - Expandable Hub

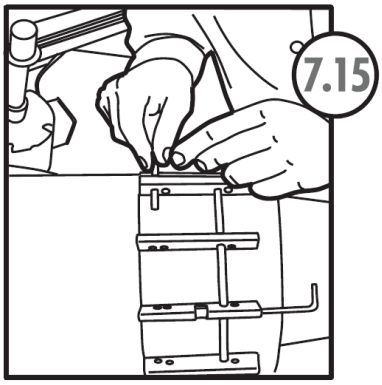

As the remaining paddles are installed, disconnect the spring and thread it through the newly installed paddles until all 12 are installed. Now insert the rear springs into the outer holes and thread the spring through each paddle.

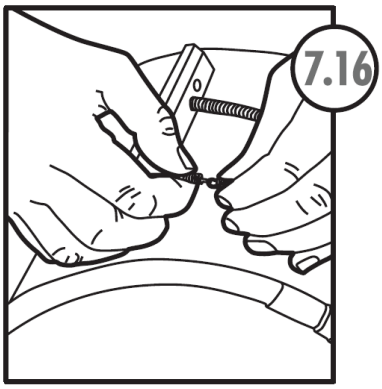

Reattach the spring ends when they meet.

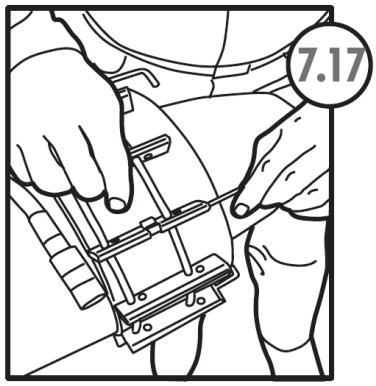

Once the spring is reattached check to make sure the locking tabs are UNLOCKED.



Reference the photo to see the completed assembly.

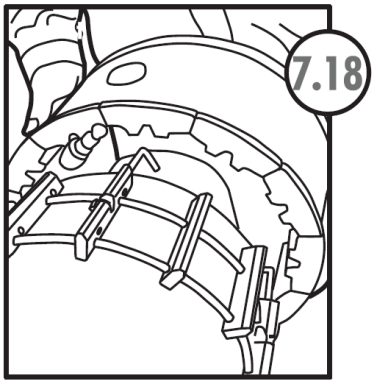

Reinstall the rim onto the hub making sure that the airline couplers on the rim are facing the airlines on the hub.

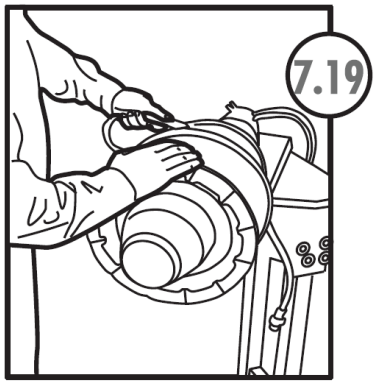

The rim must be positioned so that when the hub air hose is connected, they have as much possible to accomodate the distance required for expanding.

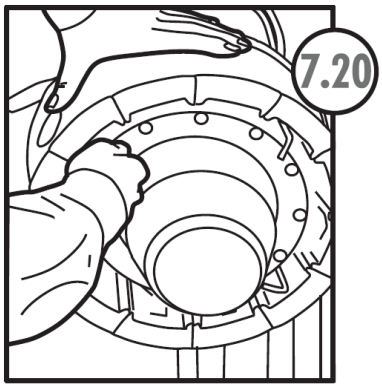

Lock the locking tabs on the rim and expand the rim.

Physically and visibly check to ensure the locking pins are secure before deflating the rim.

VERIFY LOCKING PINS ARE SECURE BEFORE DEFLATING RIM

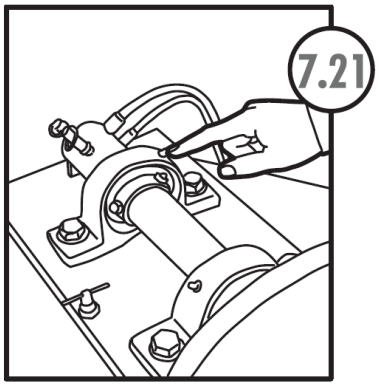

Also check the tightness of the axle set screws located on the expandable hub. Deliver 1 shot of chassis lube to the sealed bearings on the expandable hub axle.

Section 7 - Expandable Hub

MONTHLY PREVENTATIVE MAINTENANCE

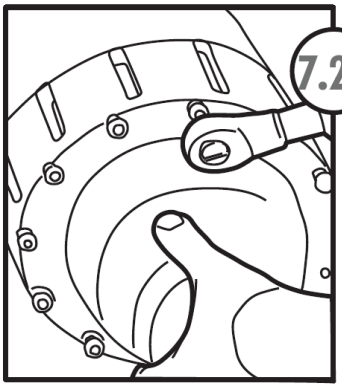

Remove the expandable rim and paddles before performing the following procedures. Take the front cover of the hub off by loosening the cover bolts but leaving them seated in the holes.

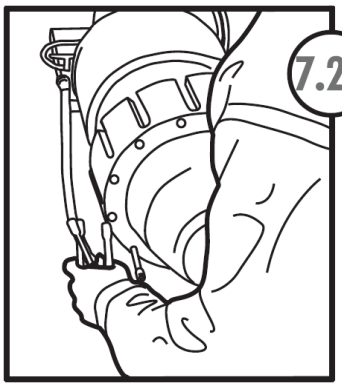

Pull the hubs cover away from the hub about 6 - 8 inches. Then remove the loosened hub cover bolts completely and set them aside.

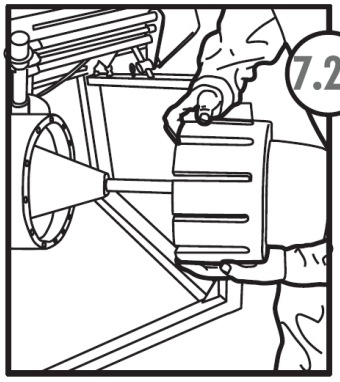

Pull the cover out straight taking care not to bend the inner shaft. Once the cover and shaft assembly is pulled out completely gently set it aside and remove the cone.

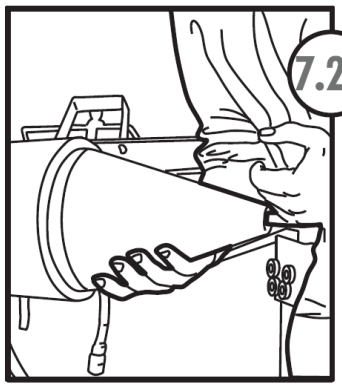

To remove the cone insert a finger into the shaft opening of the cone (being careful not to injure yourself). With the other hand grasp the narrow tip of the cone and gently work the cone out of the hub chamber. You many need to gently work the cone up and down as you pull out the cone out. Be careful not to the drop the cone it may come out unexpectedly. Set the cone on the base with cone pointing upward.

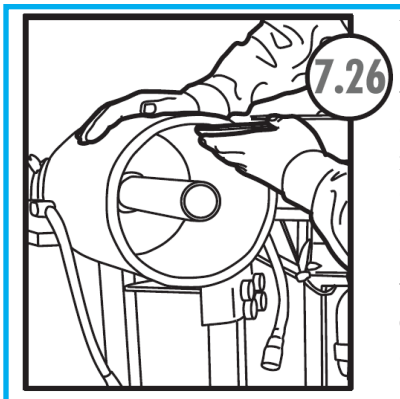

Using a cleaning solvent wash and wipe out any grease, oil or buildup that maybe on the inside of its cylinder. Using a 3M Scotch Pad to gently rub the inner walls of the hub chamber removing any lose dirt or debris. Polishing the inside will help remove any possible corrosion. The finished walls should feel ultra smooth.

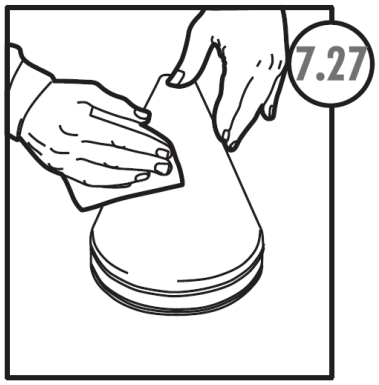

The cone will also need to be smoothed out by the same method. With the cone placed on a flat surface (cone pointing upward) use the same type of pad to smooth the outer surface of the cone. Pay special attention to the cone's surface to ensure they are very smooth to the touch.

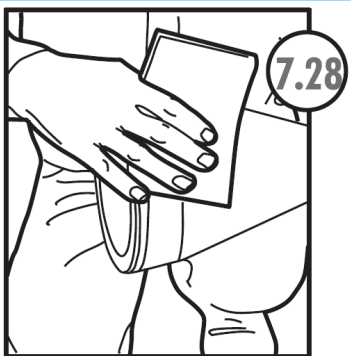

Once the cone surface is clean and smoothed, pick up the cone turning it on its side and resting it on a towel or soft surface like your lap or knee. Then smooth the flat outer surface where the rubber seal is located.

Section 7 - Expandable Hub

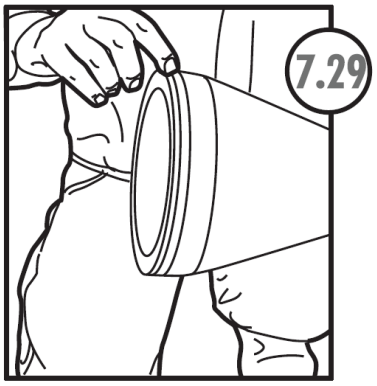

Inspect the rubber seal itself feeling for cracks and defects. If defects do appear in the large outer rubber seal or in either one of the small inner seals (at the tapered end of the cone) then contact us to obtain service kit (#10194) to replace the defective seal.



Lubricate the outer surface of the cone with a film of marine grease.

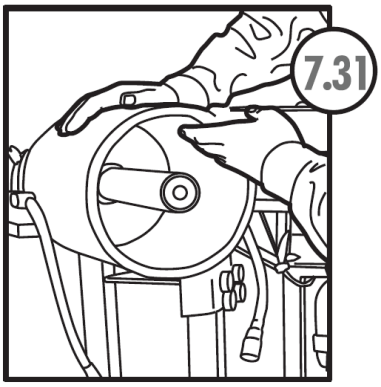

Lubricate the inside of the hub chamber as well. Apply an even film of marine grade bearing grease.

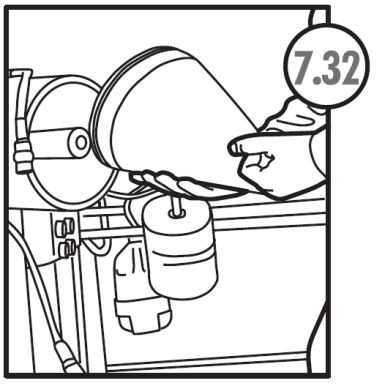

Insert the cone back into the hub chamber (tapered end facing you). Picking the cone up by inserting a finger (being careful not to injure yourself) into the top of the hub and supporting the weight of the cone by the other hand.

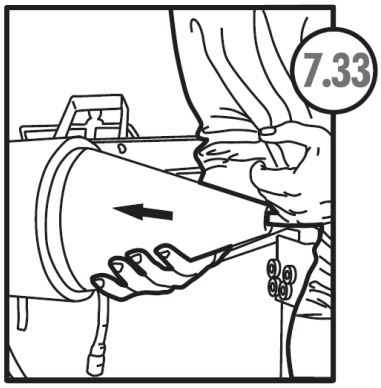

Now reinstall the cone.

Carefully align the outer base with the hub chamber opening.

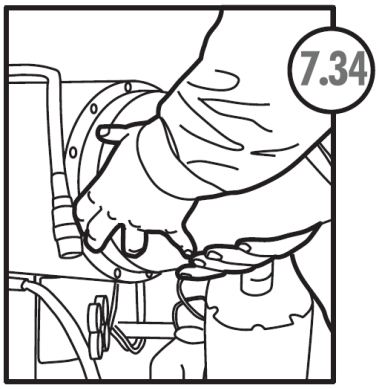

Holding the tapered end securely, begin to apply pressure to the larger outer rubber seal located at the base of the cone. This seal will form an air tight seal creating a tight fit. The seal must be compressed allowing the cone to seat inside the hub chamber.

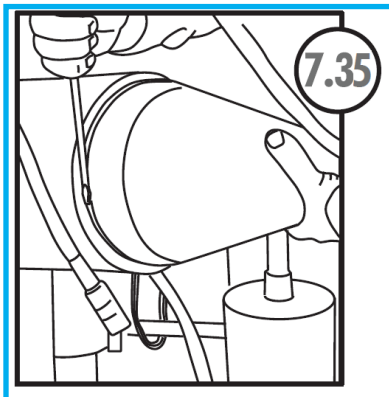

The use of a flat head screw driver may help to slowly compress the seal. Use of any tools could result in damage to the seal so never push the tip of the screw driver into seal but rather pull the tip along the seal forcing it to flatten. It may help to start at one side of the seal and focus on compressing it enough to allow the cone to gain ground.

Section 7 - Expandable Hub

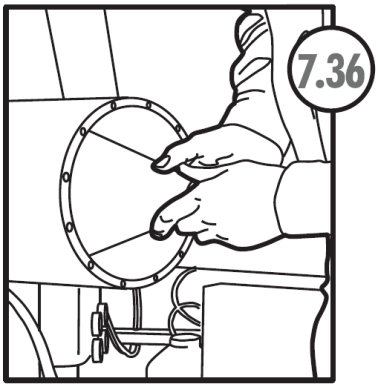

Eventually the rubber seal will be entirely contained with the hub chamber and the cone should then be gently eased into the chamber until it comes to rest on the back wall of the hub chamber.

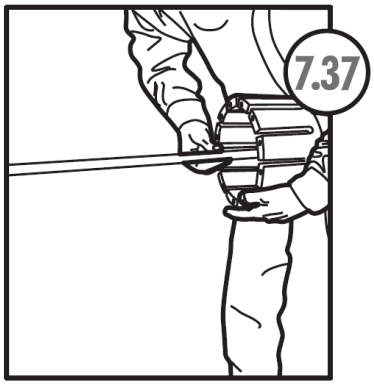

Locate the shaft and hub cover assembly. Inspect the shaft, rough areas and use 3M Scotch Guard pad to smooth them. Grease the shaft with a film of marine grease evenly along the entire length.

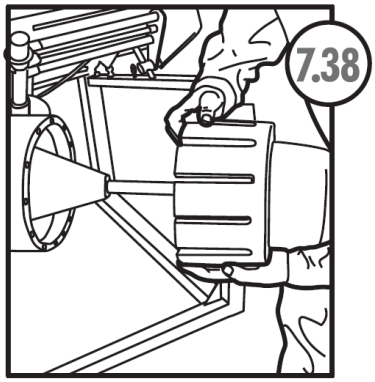

Insert the shaft and hub cover assembly into the tapered opening of the cone using extra caution as to not bend the shaft.

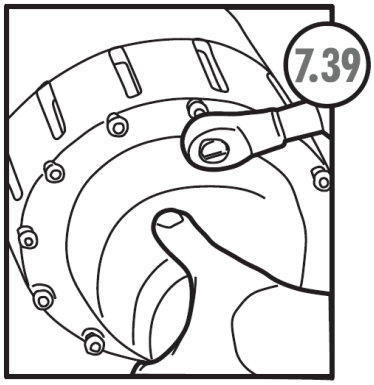

Once in place insert the hub cover bolts and insert them into the appropriate holes. Make sure each bolt is started by hand prior to using any air wrench or ratchet.

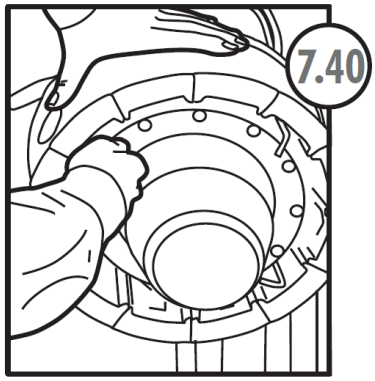

Lock the locking tabs on the rim and expand the rim.

VERIFY THE LOCKING PINS ARE LOCKED AND SECURE BEFORE DEFLATING THE RIM.

Section 7 - Expandable Hub

For proper function of air flow through the expandable Hub system, allow a slight gap. See yellow arrow.

Upon making adjustments or maintaining your machine this gap must not exceed 1/16 inch. A larger gap can substantially decrease proper air flow to the expandable hub.

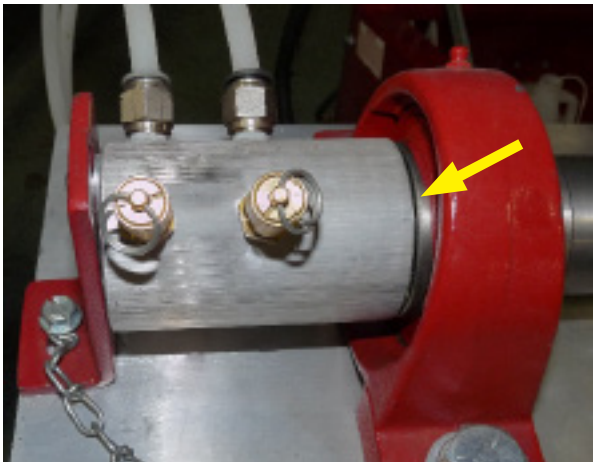

Grease the inlet hub as located by the two red arrows.

Under normal usage add one pump of grease to each zerk every 30 days.

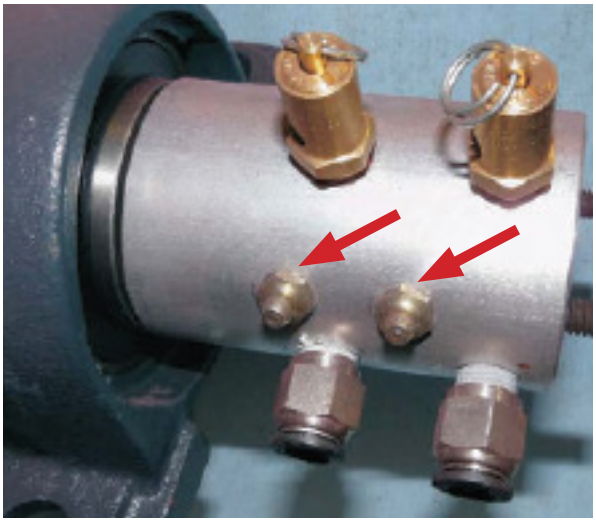

OPTIONS

THE WHEEL LIFT

Roll the tire onto the lift ramp until it reaches the backstop. Stand clear of ramp and press the foot pedal (Indicated by blue arrow) to engage the lift. Once the lift reaches the top, engage the wheel into the bearing slot. When the tire is engaged in the bearings, stand clear of the lift ramp and press the pedal to lower the lift ramp.





Section 8 - Quick Lock Wheel Adapter (#6030)

Step 1 - Base



Step 2 - Cone Storage



Step 3 - Cone Storage (3 cones)



Step 4 - Supporting Shaft and Hub Assembly



Step 5 - Unit in Position



Step 6 - Positioning of Cone



Step 7 - Place tire and wheel assembly on hub assembly



Step 8 - Tire and wheel centered



Step 9 - Placing retaining unit over shaft (Hold out 2 knobs)



Step 10 - Retaining unit in position, turn approximately 1/4 turn to lock



View 1 - Unlocked position to remove retaining unit



View 2 - Locked position when holding wheel



Section 9 - STE-M Automatic Cycle Feed



STEP 1.
Turn switch to the left to reverse motor into position on the tire to be siped.

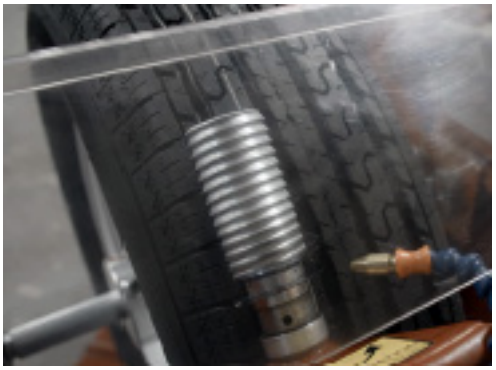

Approximate blade guide positioning shown on tire.

Position blade at same starting position as with the manual crank machine.



STEP 2.
Squeeze handle switch to start machine operation. Engage spray unit mist. After tire turns one revolution PRESS TO JOG BUTTON to move
blade guide set over to proper cutting row position.

**Repeat this operation until complete tire is siped.

Section 9 - STE-M Automatic Cycle Feed

DISCONNECT POWER BEFORE OPENING CONTROL BOX

NOTE: Prior to shipping, the electronic components in each control box are factory set, tested and approved for optimum performance.

If, upon installing a Siper STE-M with an Automatic Cycle Feed (ACF) feature and it fails to work, please review this guideline.

1. Disconnect your power source.
2. Open the control box located on the side of the machine.
3. Visually check to see if the breaker has 'tripped.'
4. Reset the breaker.

Figure 9.1 shows a circuit breaker during normal operation. Figure 9.2 shows a circuit breaker tripped. Note the position of the toggle switch and the red arrow changing to green. If any breakers 'trip,' flip the toggle to the right to the "ON" position.

Fig. 9.1 Normal operation

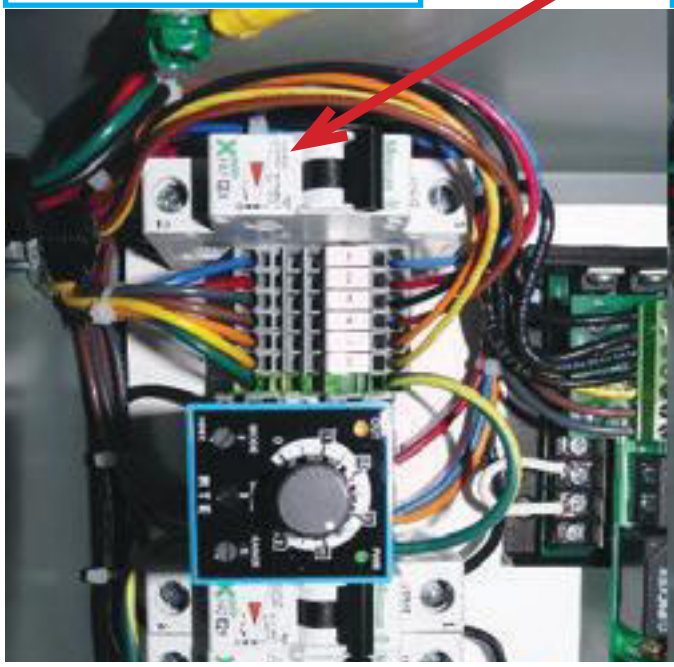

Fig. 9.2 Breaker is tripped

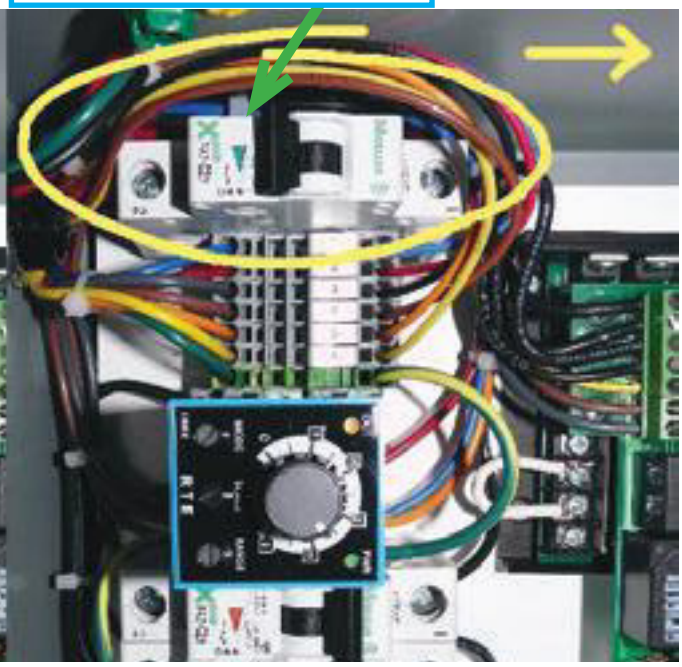

Section 9 - STE-M Automatic Cycle Feed

DISCONNECT POWER BEFORE OPENING CONTROL BOX

Fig. 9.3



Reconnect power to the unit and turn "ON."

Look for a green light indicating the power is ON.
See green arrow. (Fig. 3)

If the green light is not on recheck the breakers.

Note: The orange arrow points to the Jog mode indicator. The dial changes the jog distance and is pre-set before shipping.

Figures 4 and 5 identify the PC board in the control box. There are four adjustment wheels, but only the top two are used to set up the Siper Autofeed.

Fig. 9.4

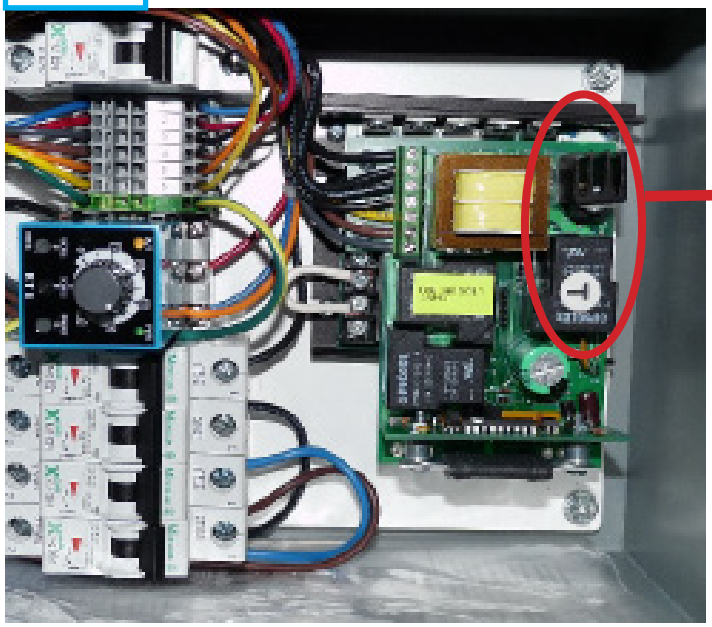

Fig. 9.5

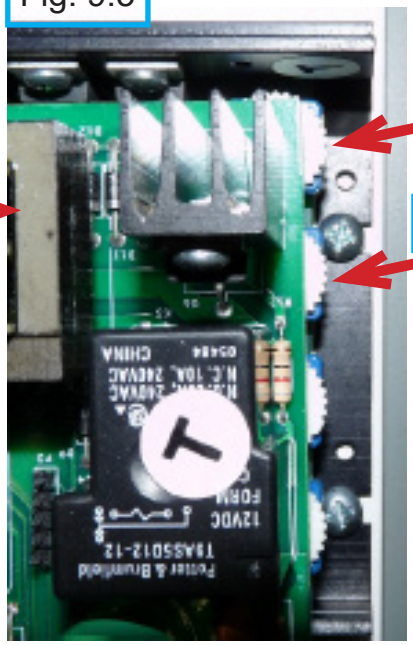

Figure 5 show the two adjustment wheels. Power is the first and Pulse/Surge is the second. Only change one of these at a time and ONLY one notch at a time.

Turn the Power wheel clockwise one notch. If the gear motor does not begins operating it may need another notch, but should not need more than 3 total. If it operates intermittently, turn the Pulse adjustment wheel one notch counter-clockwise. Fine tune this setting one notch at a time until the gear motor runs smoothly.

When complete close and secure the control box cover.

Section 9 - STE-M Automatic Cycle Feed

Fig. 9.6

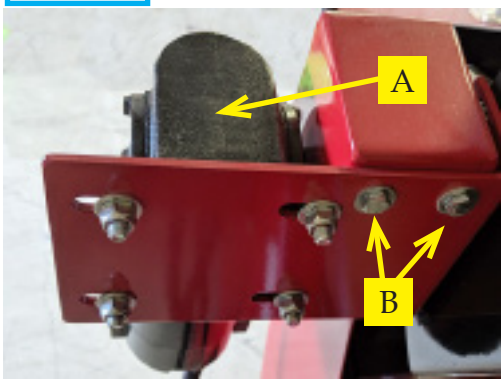

MOTOR GUIDE ADJUSTMENT:
Occasionally due to machine use and movement, the cross feed guide bars may become misaligned causing the right angle motor (Fig 6 A) to pull hard and blow a fuse.

To realign, unplug the unit and loosen cap screw (Fig. 7 C) reposition guide bars so they are parallel and retighten.

Fig. 9.7

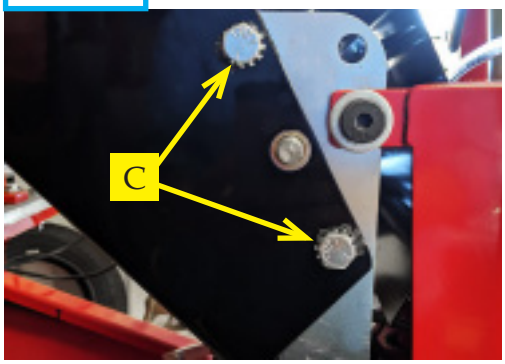

MANUAL OPERATION:
Please remove motor (Fig. 6 A) by loosening bolts (see Fig. 6 B) and replace with the manual crank.

ANGLE SIPE OPTION
#6166

The motor drive unit on a Siper can include an angled motor mounting bracket. This option enables tires to be siped at four additional 15 degree angled increments than a standard unit.

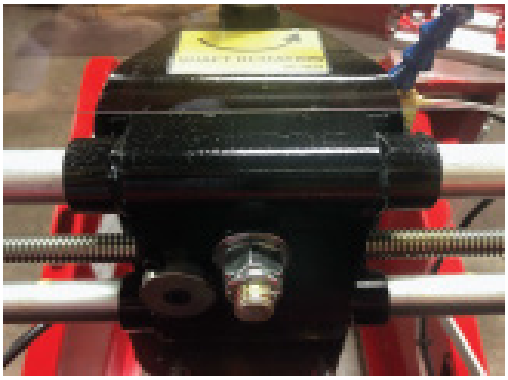



WHEEL ADAPTERS

Two large sized wheel adapters for non-mounted tires are available for Sipers.

#6138: 19.5″
#6143: 22.5″

NOTE: Mandrel and nuts sold seperately



Section 10 - Repair Parts

Description	Item
Bearing, Ball .5 x 1.125	72.107
Blade Guide Set "A" 250/1000	24.929
Blade Guide Set "AA" 300/1000	25.929
Blade Guide Set "D" 350/1000	26.929
Blade Guide Set "E" 400/1000	27.929
Drive Shaft Kit 8”	5.964
Fuse, 20 amp	16248
Lead Screw 11/32	56.242
Lead Screw 13/32	55.242
Lead Screw 5/32	58.242
Lead Screw 7/32	57.242
Lead Screw 9/32	62.242
Paddle, Lock	5844
Paddle, Plain	4885
Plastic Shield	4479
Regulator, 40 psi	12640-40
Regulator, 125 psi	15.190
Silicone Emulsion 1/2-Gallon	2.029
Siping Blades(1 Dz Per Unit)	18.071-Dz
Spanner Wrench	6.887
Spider Only .75	31.034C
Spray Mist Coolant Unit	167.190
Spring .75" L	10716
Spring, Extension 28" (Ref 900512)	4926
Spring, Lock Compression	4977
U-Cup 1-1/2 ID x 2-1/8 OD Rubber	4973
U-Cup 3/4 ID x 1 OD 70 Duro Black	4976
U-Cup 7-3/8 ID x 8 OD	4975
U-Cup, Moisture Deflection	10875
Valve, Ball Silver/Black	04.103
Valve, Mini Push Pull	252.190

Notes

California Proposition 65

California's Proposition 65 entitles California consumers to special warnings for products that contain chemicals known to the state of California to cause cancer and birth defects or other reproductive harm if those products expose consumers to such chemicals above certain threshold levels.

WARNING: Some of Tire Service International's products can expose you to chemicals including chromium compounds, which are known to the State of California to cause cancer, birth defects or other reproductive harm. For more information, go to **www.P65Warnings.ca.gov**.

Your risk from exposure to these chemicals varies, depending on exposure time. To reduce your exposure, work in a well-ventilated area and with approved safety equipment, such as dust masks that are specially designed to filter out microscopic particles. Wash your hands after touching TSI's products.

Warranty and Return Policy

Warranty & Workmanship you can depend on.

With over 30 years of manufacturing experience we maintain the ability to provide competitive prices while employing and manufacturing the majority of our products in the USA. Pride in our workmanship and standing behind each and every product is not just our claim but our uncompromising responsibility.

Tire Service International equipment is warranted to be free from defects in materials and workmanship for a period of one year from the date of original purchase to the original owner. Repair labor is warranted for 90 days from the date of original purchase. Bushings, blades, bearings and normal wear and tear are not covered under warranty. Careless handling, negligence, misuse, abuse, mutilation, improper operation, making unauthorized repairs, additions, and or alterations automatically cancel this warranty and relieves TSI of any obligation. Cheetah tanks claimed to be defective while under warranty will be evaluated at our manufacturing plant and either repaired if possible or exchanged and returned or credit issued to the customer account at our discretion. Damage resulting from dropping the tanks will not receive warranty consideration. Warranty parts need to be returned prepaid to the plant for credit. Any replacement parts shipped from the plant will be shipped at the customer's expense. Machines requiring warranty work must be brought to the manufacturing plant in 201 Chelsea Rd, Monticello, MN or to a repair facility authorized by TSI.

TSI TIRE SERVICE INTERNATIONAL

Register your product online!

www.buytsi.com/registration

!!WARNING!! Goods returned without an RGA will be refused. A Returned Goods Authorization form must be obtained before returning any material or goods. All non-warranty returns will be subject to a 15% restocking fee plus any additional charges for reconditioning/repacking.

Visit www.buyTSI.com for any additional information. Also be sure to follow us on all the Socials, and subscribe to our YouTube channel for all our product videos.

No part of this manual may be reproduced without specific approval from Tire Service International, LLC.

Copyright © 2024 Tire Service International, LLC